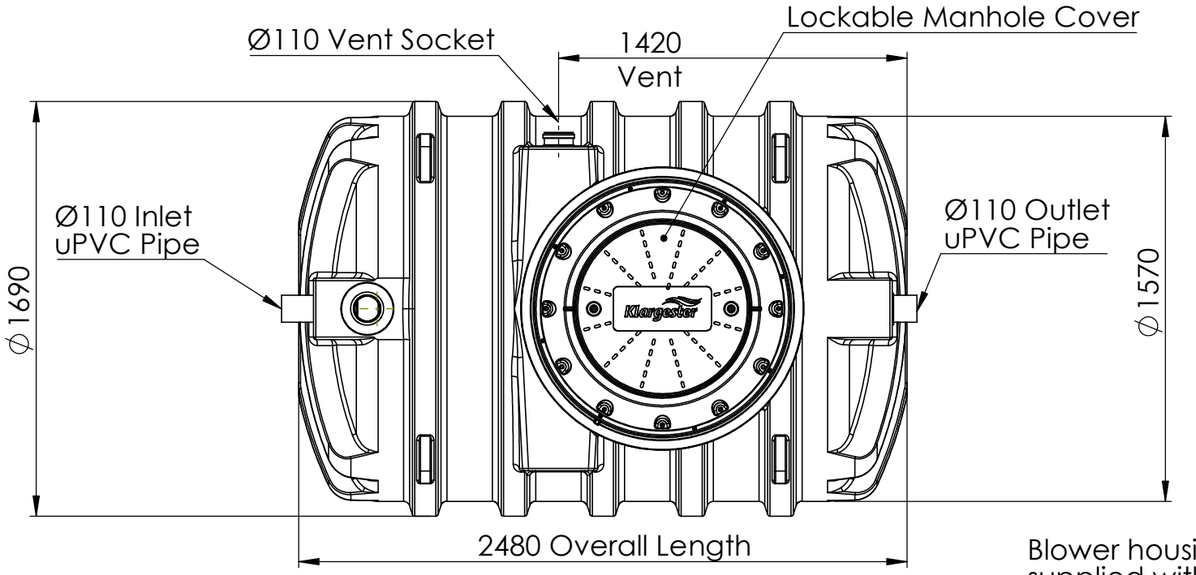

Notes :

1. Inlet and Outlet are Ø110 mm. Suitable reducers should be used to step down from bigger pipework. Supplied by others.
2. Units invert is adjustable by trimming external riser to required height. Selection of correct invert is key and must be suitable for drainage and ground levels on site.
3. Ext neck kit available for deeper inverts up to a maximum invert of 1440 mm. See extension neck drawing for assembly details.
4. It is important to read and understand installation operation and maintanance guidelines before attempting to install this unit.
5. Vent pipe connection is supplied but vent runs and stacks are supplied by others.
6. Air hose for tank internals is supplied with blower housing and is run through the vent.
7. Tank Weight (Empty) - 195 kg
8. Rodding point supplied by others. This needs to be finished at ground level. Standard 4" (Ø110 mm) drainage pipe and cap supplied by others.

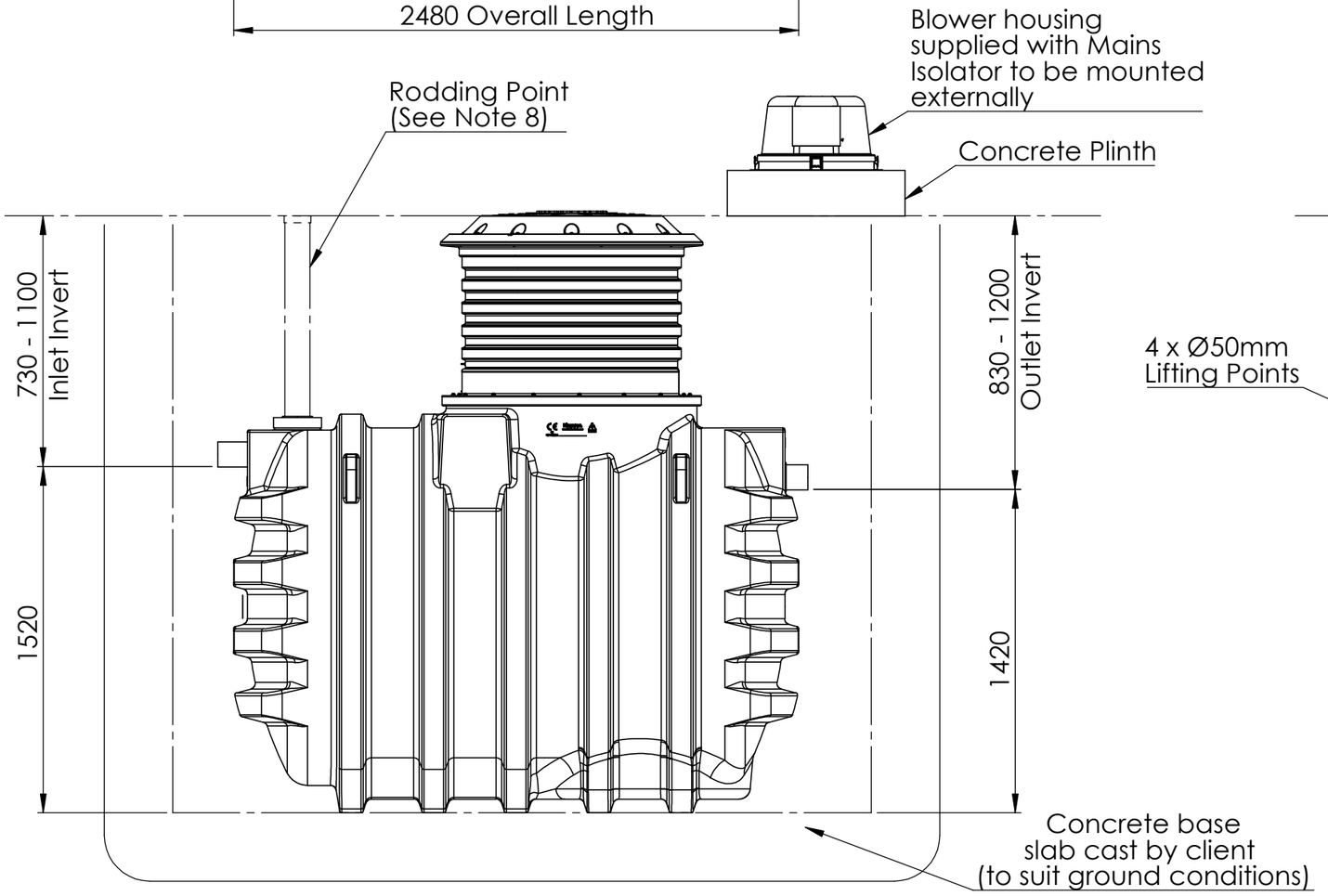

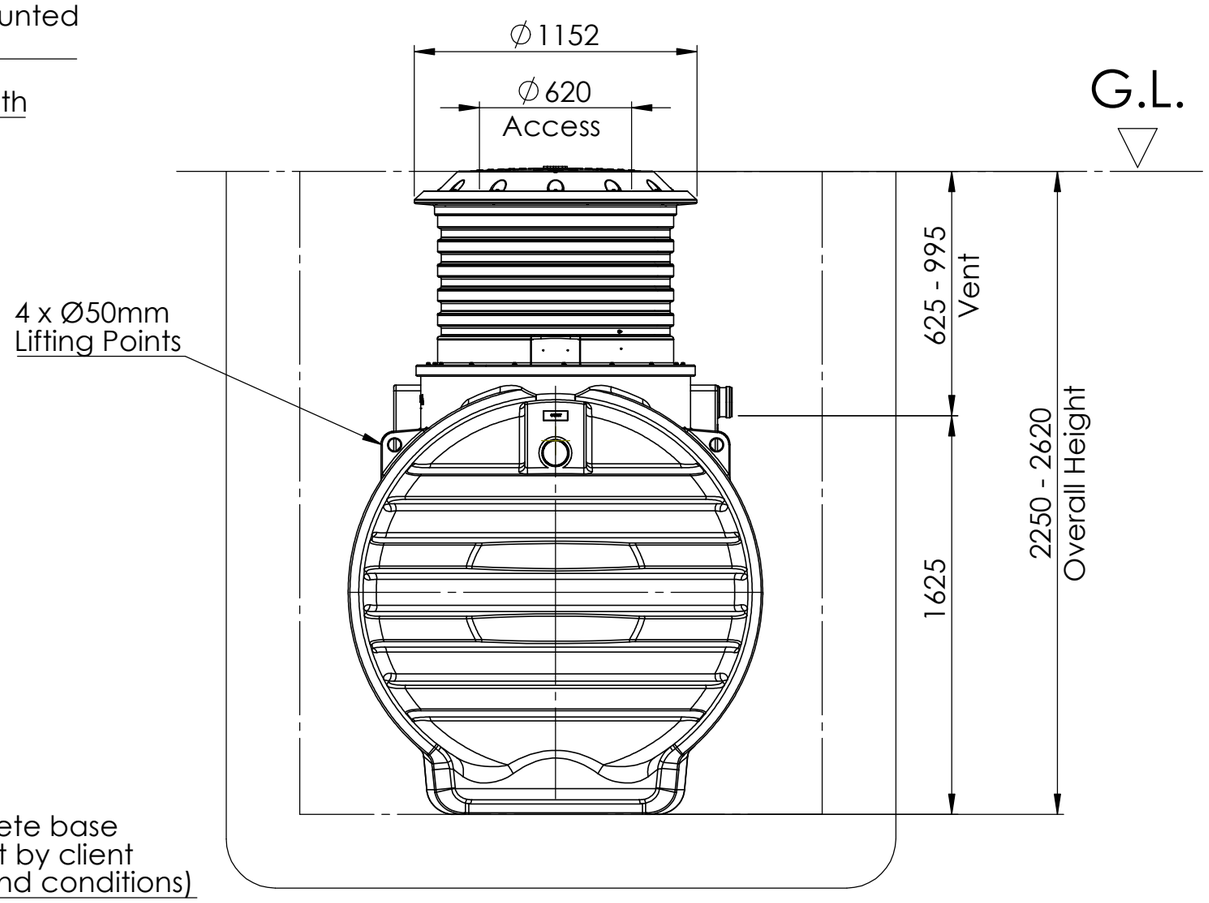

Please check with Klargester for the latest Issue of the drawing

Issue	Date	Drawn By	Approved By	Description
05	30/06/2025	D.Musvaburi	D.M	ECN 2214 - Capping the Ø200 stilling pipe on BioTec+
04	14/04/2025	D.Musvaburi	D.M	ECN 2170 - Adaptor added

LN Number :	Tolerance (unless stated) :
Finish :	Thickness :
Weight :	Surface Area : m²
Modelled By :	Material :

Drawing : DS1478P

BioTec+ 3 Gravity Sales Drawing

All Dimensions In mm

Scale: Do Not Scale

Third Angle Projection

A:\Wastewater\Engineering\Drawing Data\02 - Sales Drawings\DS\DS - 14\DS1478P

Kingspan Water & Energy reserve the right to alter the details of this drawing without prior notice. This drawing is copyright and may not be reproduced or used without the written permission of Kingspan Water & Energy

Kingspan