REV	DESCRIPTION	DATE	APPROVED
1	Initial Release	05/02/2018	DJD
2	Heating & Lighting Removed	01/05/2018	DJD
3	Title Block - Address & Misc.	21/10/2020	MJRM
4	Title Block Revision	16/01/2026	MAL
5	Model Updated	30/01/2026	MAL

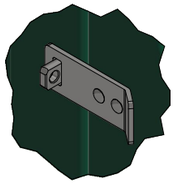

DETAIL A
Hasp & Staple [St/St]
Excl. Padlock

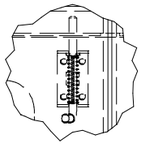

DETAIL B
Internal Spring Bolt
(1no Top & 1no Bottom)

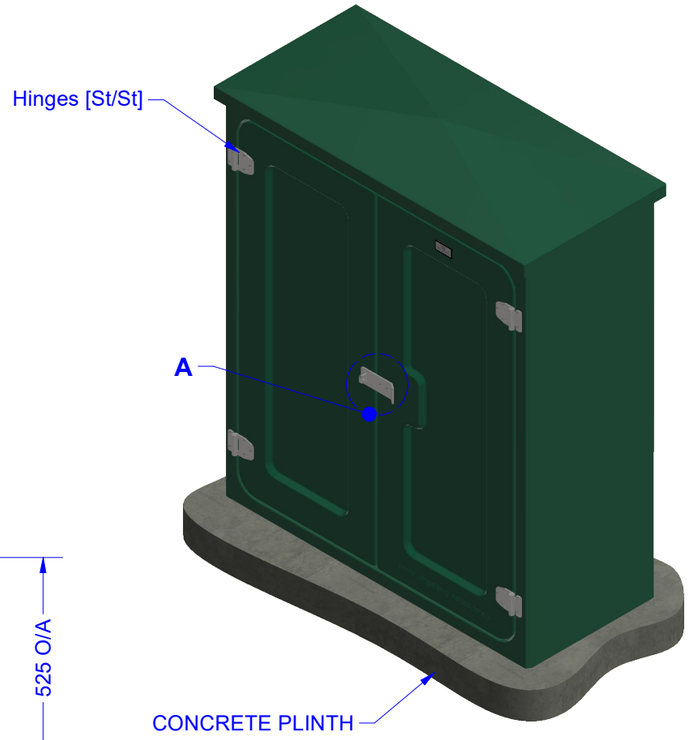

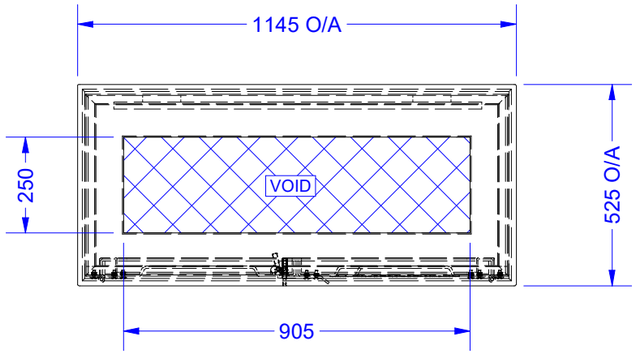

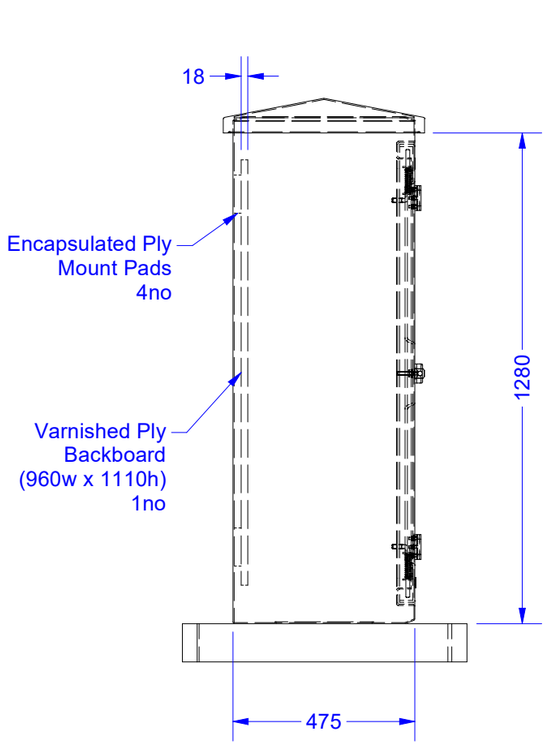

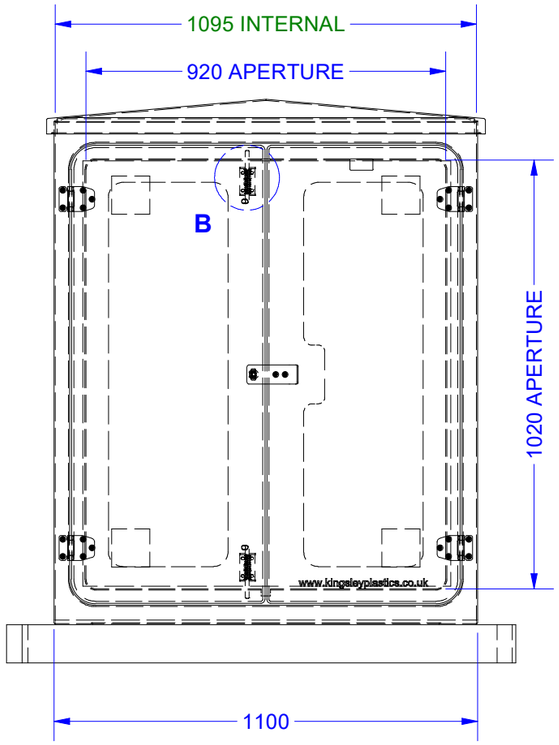

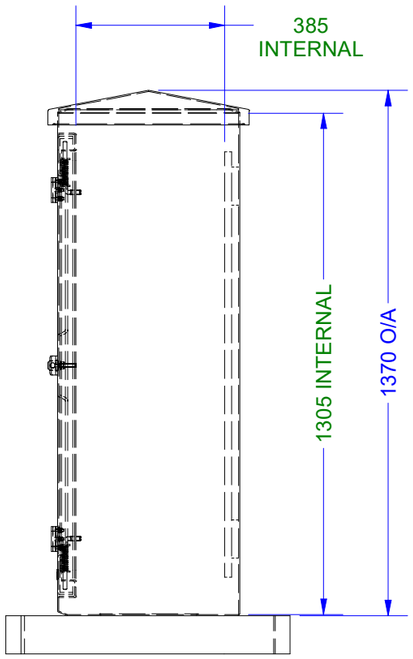

Kingsley Plastics Limited,
The Airfield, Winkleigh,
Devon, EX19 8DW

T:01837 83154

www.kingsleyplastics.co.uk

CABINET DETAILS		
Surface Finish	**Exterior Colour**	**Interior Colour**
Smooth	RAL 6005	RAL 7035

Specification Summary:

Construction:
Single Skin

Overall Lock Specification Summary:
Hasp & Staple [St/St]

Ventaltion Specification Summary:
None (Optional)

Roof Type:
4-Way

Drawing Title

KD4 : GRP Cabinet
General Assembly

Customer Details:

Customer: -
Project Name: -
Customer Ref: -
Works Order No: -

Optional Extras:

- Other Colours Available on Request
- Track & Arm Doorstays
- Various Vent Configurations
- Yale Lock Alternative
- 3-Way Locking Alternative
- Cable Entry Flap (Standard Size 200x200mm)

3rd Angle Proj.

General Manufacturing Tolerances: Millimetres

LINEAR:

0-500mm	+/- 1.0mm
500-2000mm	+/- 1.5mm
2000mm +	+/- 3.0mm

	W	D	H
Internal Size (mm):	1095	385	1305
External Size (mm):	1105	475	1370

Filename: KD4_Assm-05_A.dwg

Drawn By: M.A.Lilley Date: 30/01/2026

Approx Weight (Kg): 49.000 Current Rev: 5

THIS DRAWING IS A PRIVATE AND CONFIDENTIAL COMMUNICATION AND THE PROPERTY OF KINGSLEY PLASTICS LTD.
IT MUST NOT BE COPIED OR LOANED WITHOUT THE WRITTEN CONSENT OF KINGSLEY PLASTICS LTD. AND MUST BE RETURNED IMMEDIATELY ON COMPLETION OF TENDER OR CONTRACT.

DO NOT SCALE IF IN DOUBT - ASK!!